ST-1

Frequency Plan

Uplink

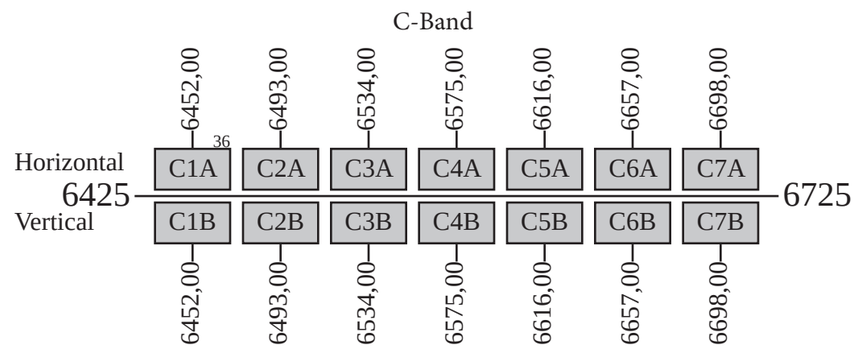

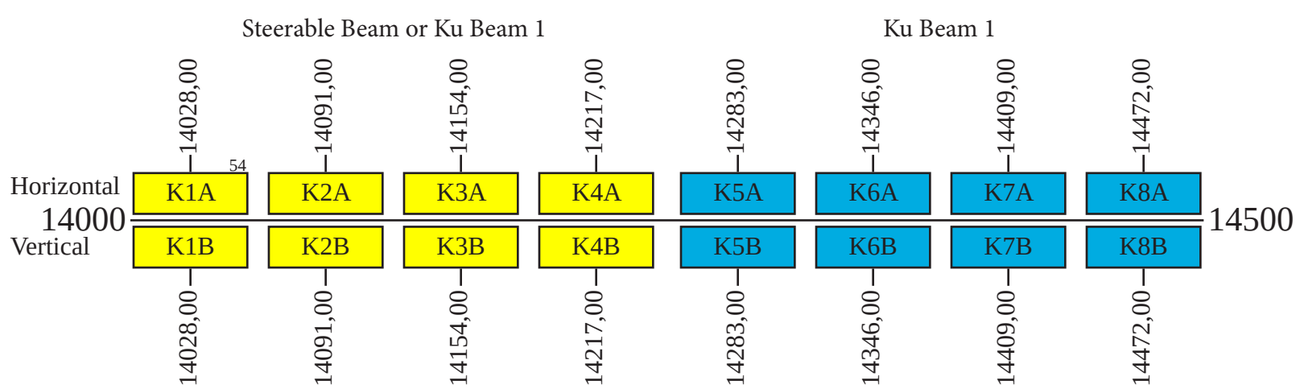

Downlink

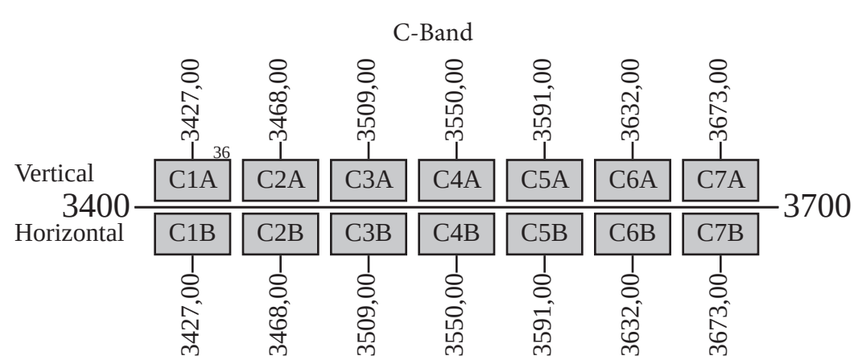

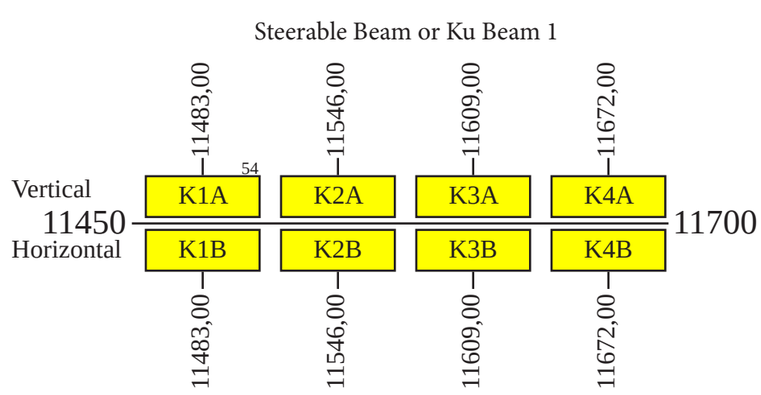

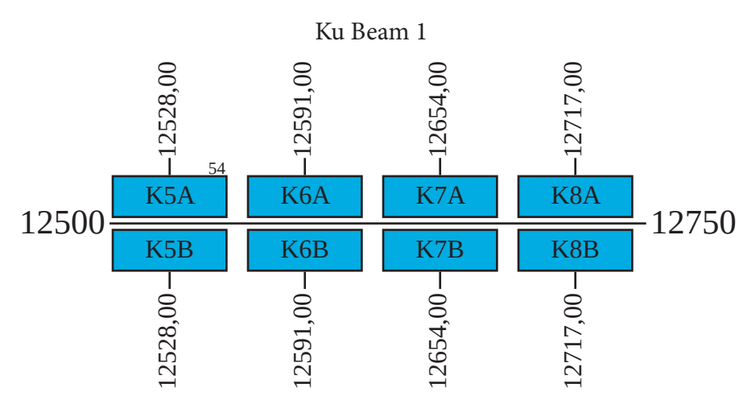

Command 1: 6426,25 H
Command 2: 6427,75 H
Telemetry 1: 3698,00 V
Telemetry 2: 3699,00 V
Beacon 1: 3695,50 V
Beacon 2: 11450,25 H
Beacon 3: 11699,75 V
Beacon 4: 12500,25 H
Beacon 5: 12749,75 V